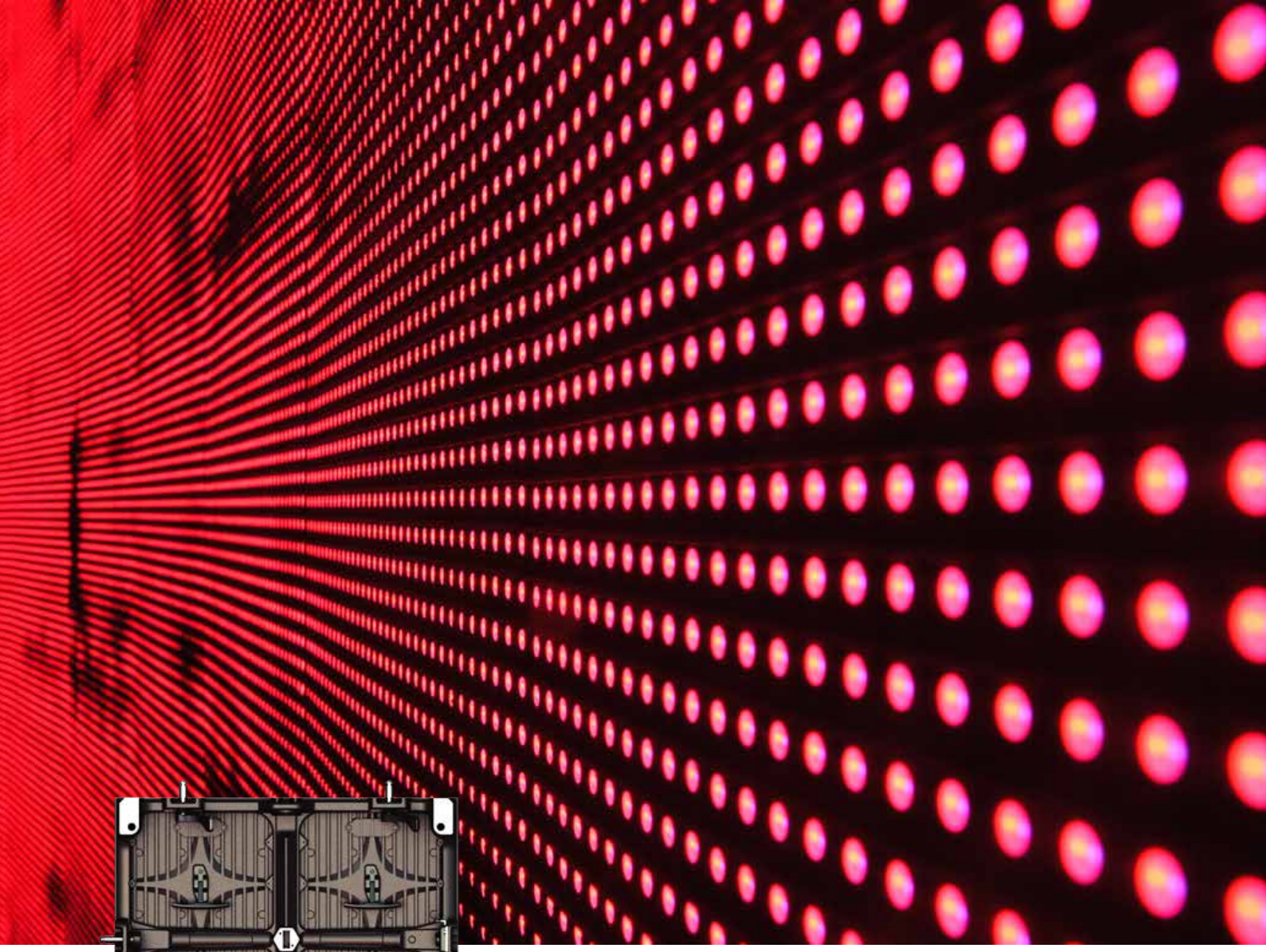

naipix

REEF SERIES

Indoor: 2.6 mm / 2.97 mm / 3.9 mm
Outdoor: 3.9 mm / 4.8 mm / 5.95 mm

INDOOR OUTDOOR RENTAL

- Quick Maintenance
- One-man Job
- Edge Protection
- Super Lightweight
- Modular Design
- Multi-Function

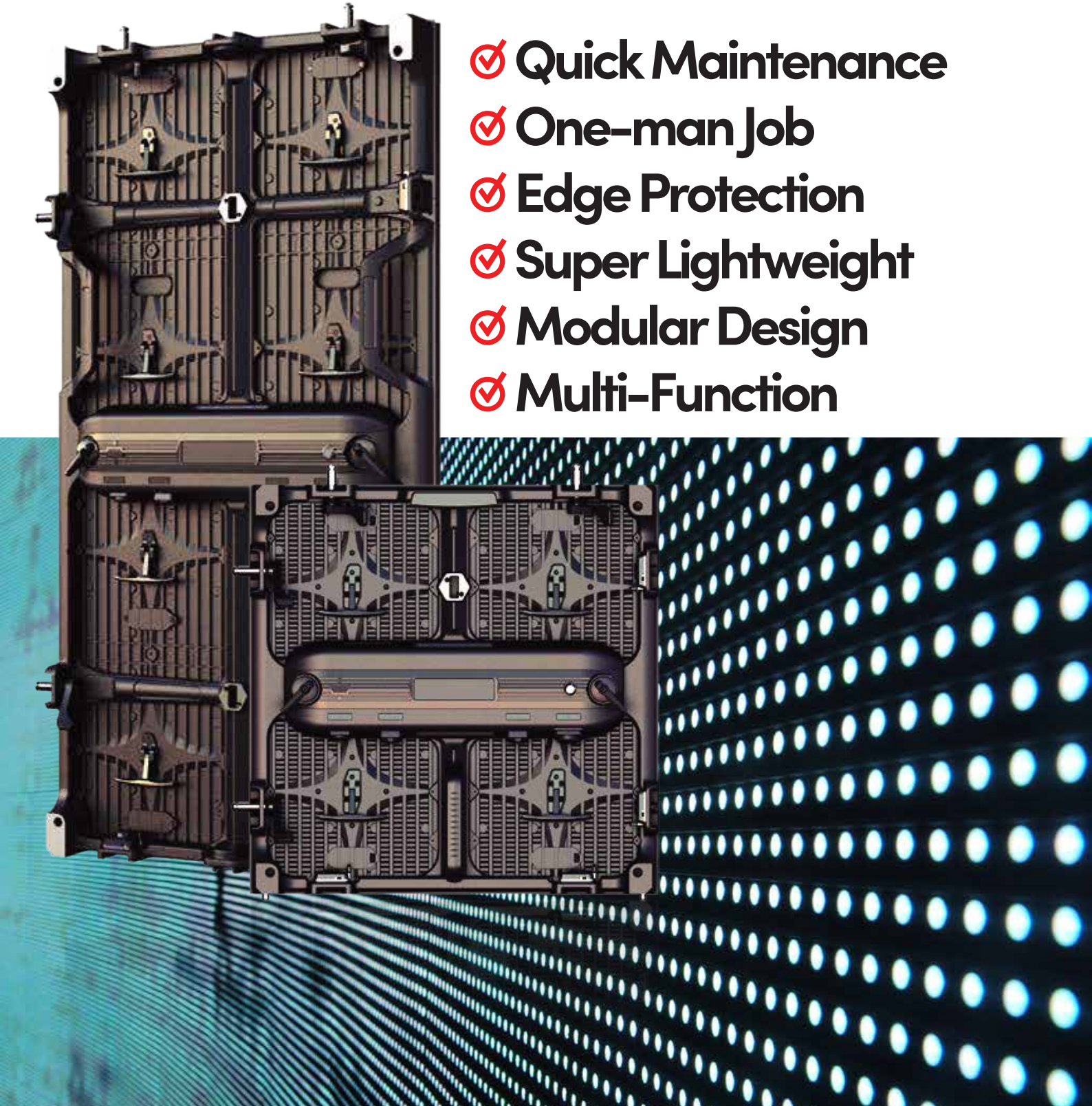

REEF SERIES

Memory on modules

The *memory on module* function is integrated into the design of the whole **Reef Series**. This function allows an easy and fast configuration when replacing modules as it loads the calibration data of the new unit inmediatly after the replacement.

Quick Maintenance

For indoor models magnetic module design enables a quick front & rear service, while for outdoor models both screws and magnets are used to balance the ease of use, flatness and safety. The power box also sports two handles for quick removal, to make the job fast.

Super lightweight

It's not about being the lightest in the world, it's about being as light as possible with no sacrifice in performance. At merely 12 Kg. per panel for outdoor 500 x 1000 mm, **Reef Series** still reach up to 6,000 nits brightness.

Quick side locks

The side locks are the same design as the top locks, providing superior strength and installation convenience. Curvable locks are available upon request, providing -10 to +10 degrees angles.

Cabinet mapping

Cabinet mapping function is the key to simplify large installations. Standing in front of the screen, the data drawing will be displayed on the screen with serial number to help the user during the mapping process.

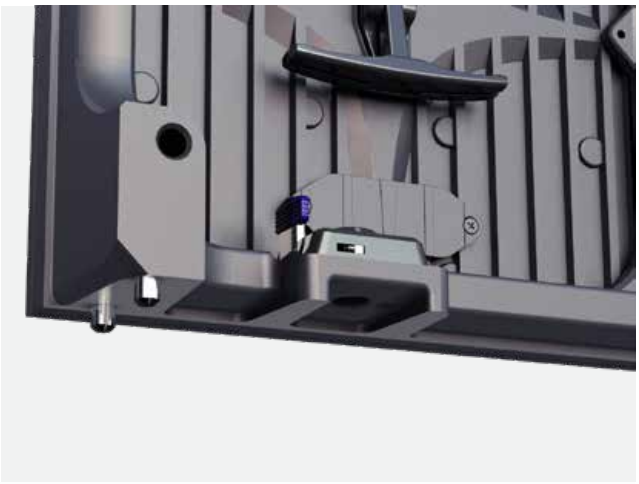

Edge protections

Reef Series was designed with extra reinforcement both in its extruded pins on bottom and on the LEDs around the edge, which double the strength of regular LED Screens. *Standard on Reef 2.9 and available on other pitches upon request*

One-man Job

Installing a LED Screen of **Reef Series** can really be a One-man Job. For either stacking or hanging, with a simple click the user is able to self-lock the two cabinets, with a click status sign to avoid mis-operation. While handles are used to tighten the connection and eliminate gaps, the locks are easy enough even for one man to uninstall.
The 8-12 Kg. panel weight also provides an acceptable experience to temporarily hold the cabinet by one hand, leaving the other free to release or tighten locks.

REEF SERIES

Corner

A real samless corner that delivers a great visual experience even from a close distance.

Customized solution upon request
Only for indoor 500 x 500mm cabinet size

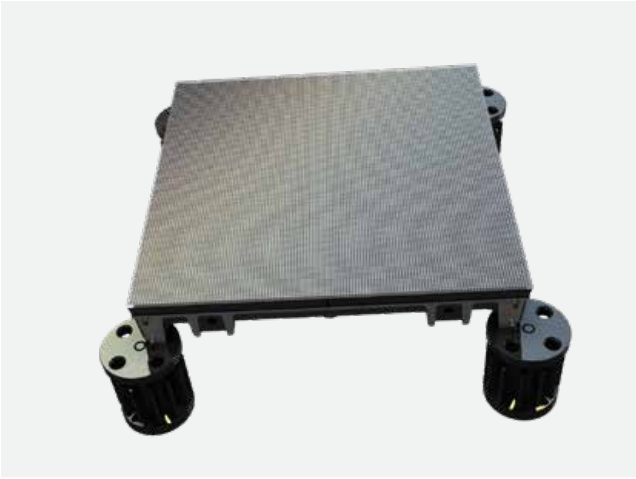

Floor

With very simple additional accessories, the standard cabinet can be used as floor, adding more versatility to the series.

Need additional accessories
Only for outdoor 500 x 500 mm cabinet

Modular design

With a highly standardized modular design, the different models of **Reef Series** share the same cabinet frame & power box. Good for manteniance and service, identical modules on each model suit any position on the cabinet. No confusion, no hassle.

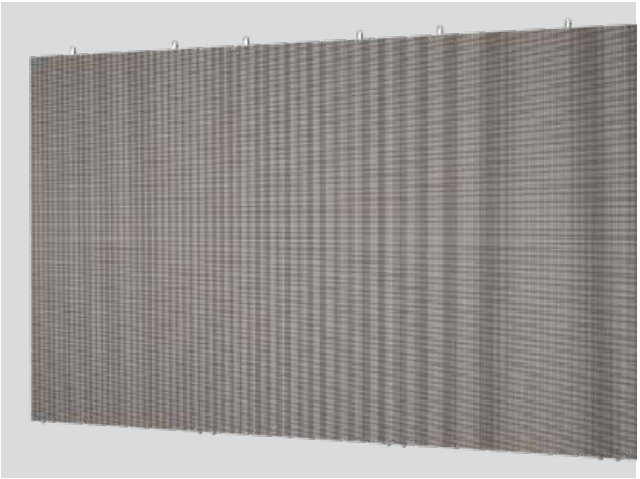

First class flatness

Reef Series cabinets frames are produced following the highest standards of the industry and they are tested in exhaustive quality controls.

REEF SERIES

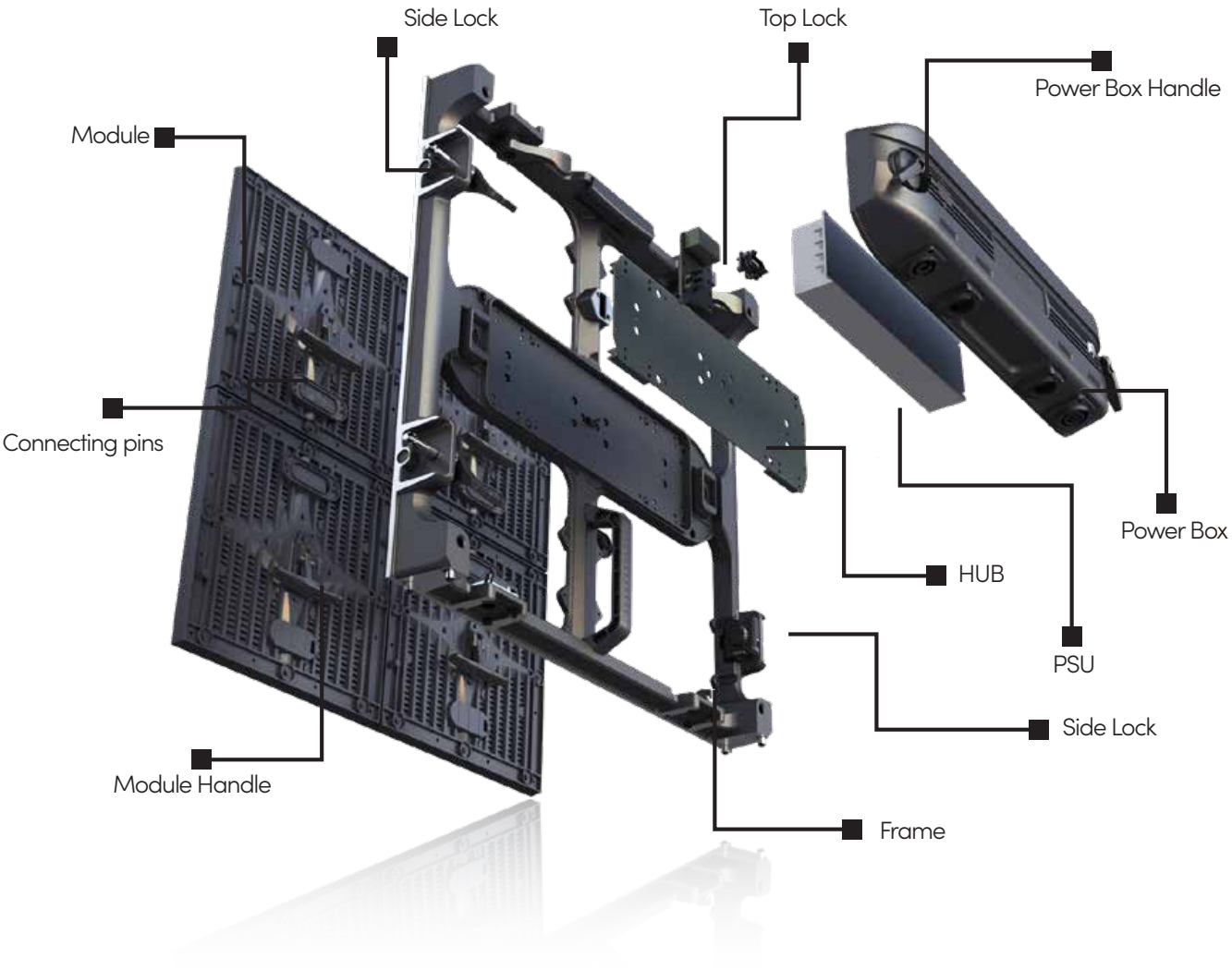

■ Dolly

■ Super Lightweight Flight Case

REEF SERIES

	INDOOR			OUTDOOR		
Product Code	RN2.6S	RN2.97S	RN3.9S	R3.9S	R4.8S	R5.95S
Pixel Pitch		2.97mm	3.9mm	3.9mm	4.8mm	5.95mm
Dimensions	500x500mm	500x500mm	500x500mm	500x500mm	500x500mm	500x500mm
		500x1000mm	500x1000mm	500x1000mm	500x1000mm	500x1000mm
Module Size	250x250mm	250x500mm		250x500mm		
Weight per panel	8Kg	8/13 Kg	8/12 Kg	8/12 Kg	8/12 Kg	8/12 Kg
Refresh Rate	1920 / 3840 Hz			1920 / 3840 Hz		
Brightness	1000 nits			4000-6000 nits		
IP Rating	IP40 / IP21			IP65 / IP54		
Max Hanging	10 m		10 m			
Optional Curve	-5°,5°,10°		-10°,-5°,5°,10°			
Certificate	EMC , LVD , ETL , FCC		EMC , LVD , ETL , FCC			
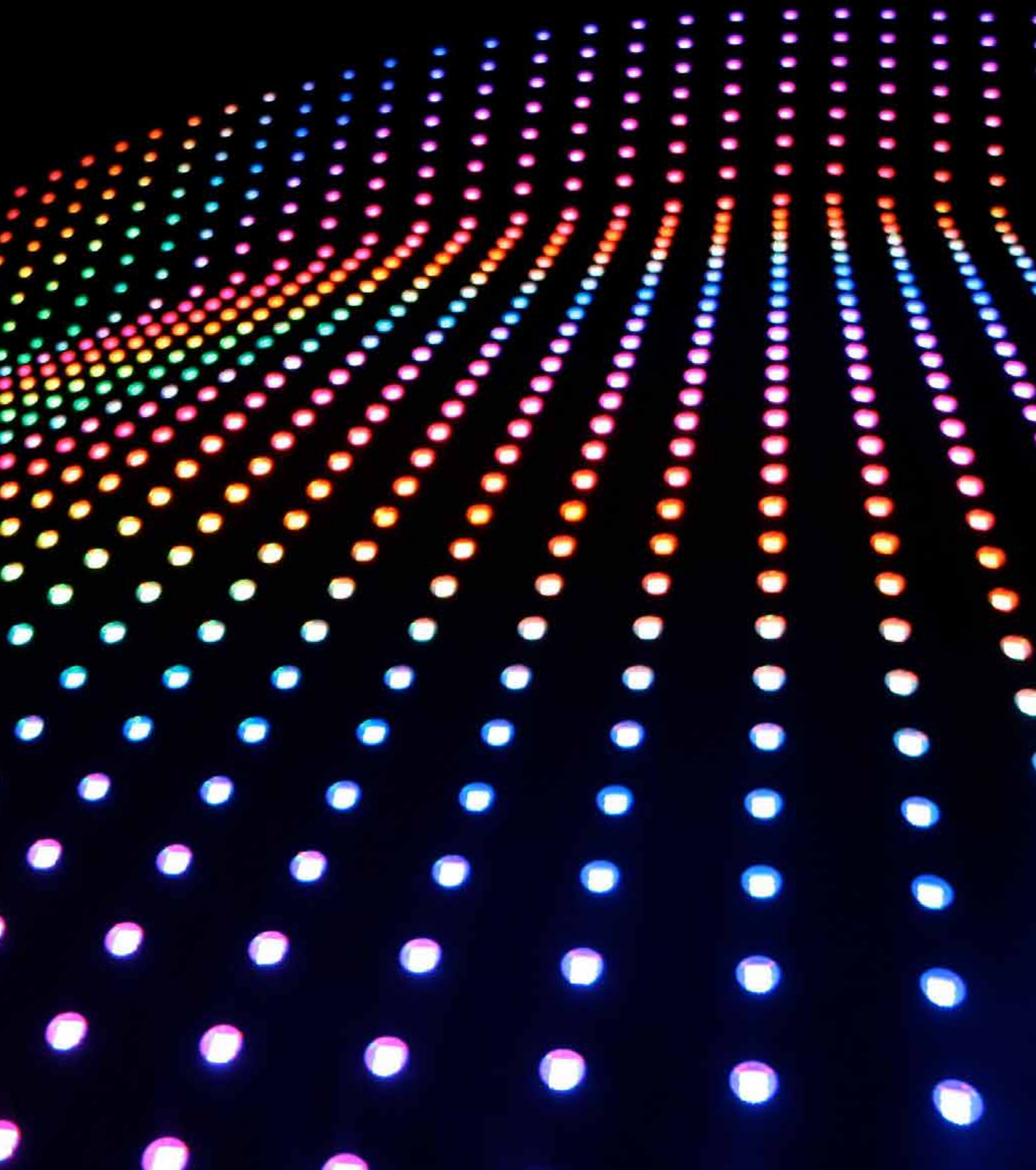
naipix